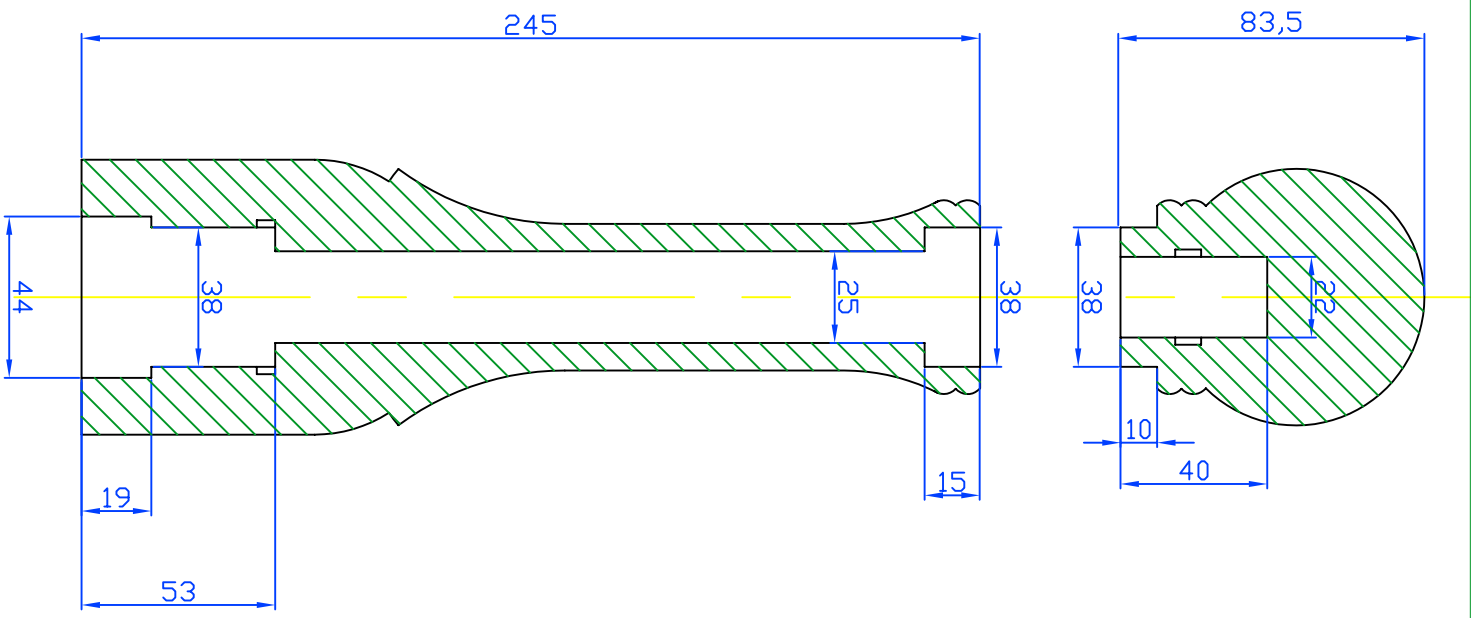

Grinder Mechanism
Assembly plan.

Andrew Harrisson
ph: 0438 317 263
email: andrew@harrisson.id.au